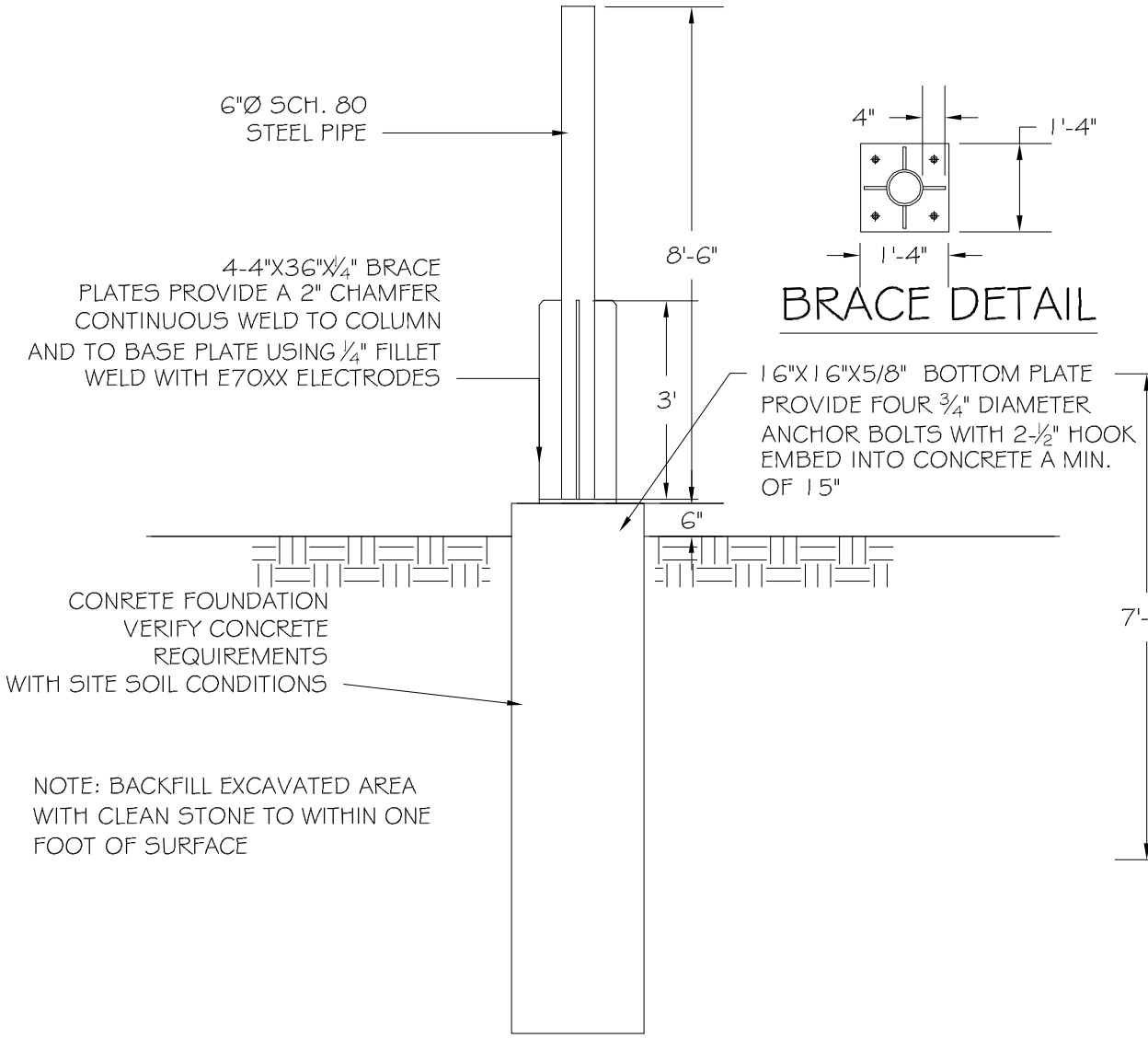

CONCRETE BASE AND STEEL POST W/ BRACES

BRACE DETAIL

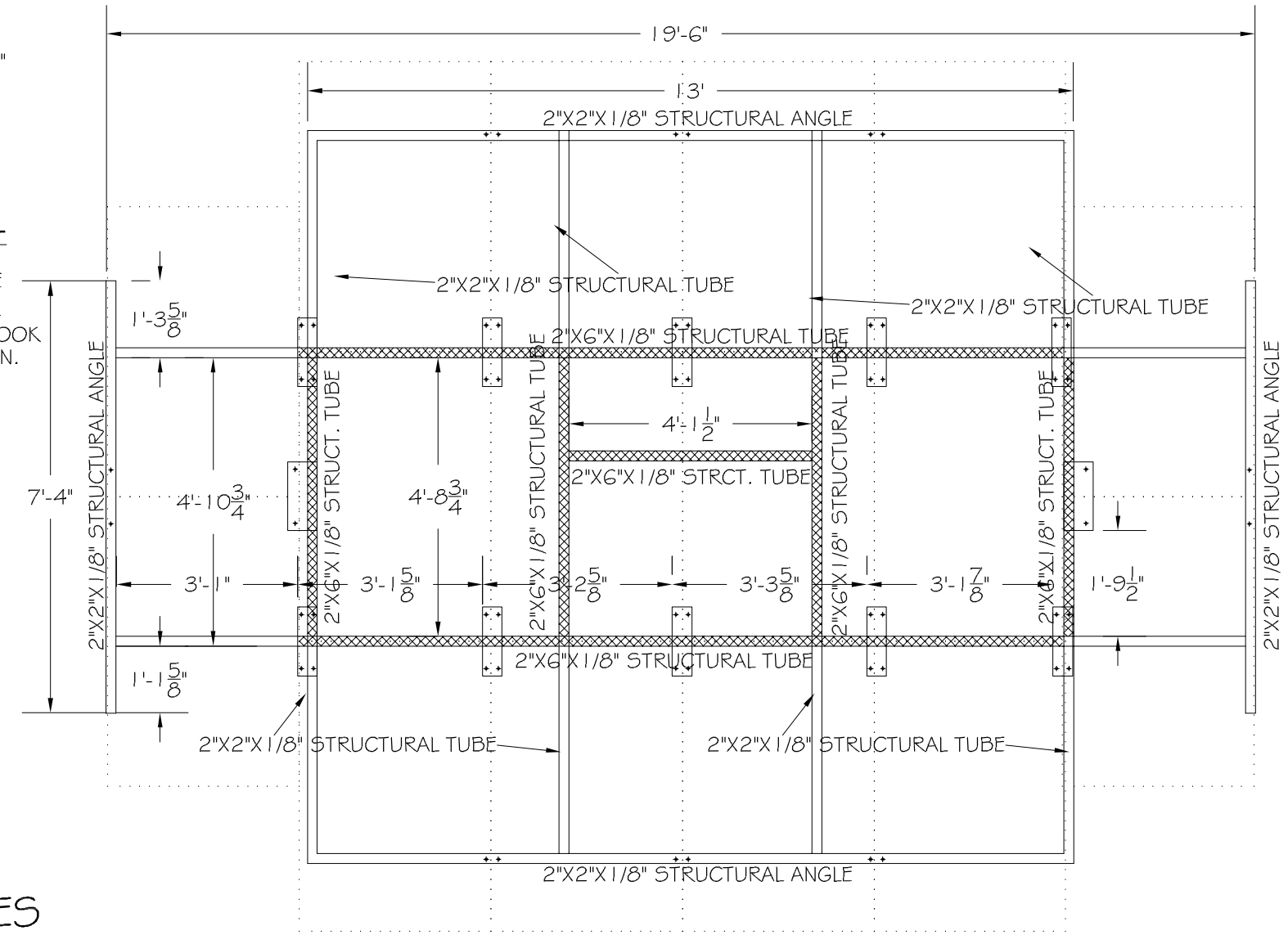

FRAME FOR 250 SQ.FT. SUN-TRACKER

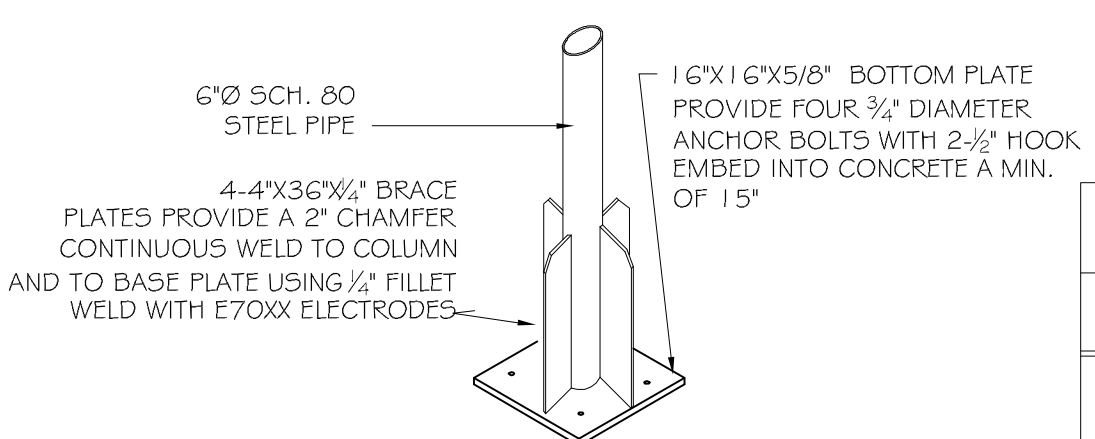

POST BASE DETAIL

REQUIRED FOUNDATION SIZE BASED ON SOIL CONDITION
90 MPH WIND LOAD

ALLOWABLE FOUNDATION PRESSURE* (PSF)	LATERAL SOIL BEARING* (PSF/FT)	REQUIRED FOOTING SIZE
4,000	400	4'-6"x4'-6"x5'-3"
4,000	400	2'X8'-3" (DIAMETER X DEPTH)

*IF SOIL TYPE DOES NOT MATCH SOIL TYPE DESCRIBED THE FOUNDATION SHALL BE DESIGNED BY A QUALIFIED PROFESSIONAL ENGINEER OR LOCAL BUILDING OFFICIAL

BLACKHAWK ENGINEERING, Ltd.
Civil & Municipal Engineering and Building Design
PLATTEVILLE, WISCONSIN OFFICE PHONE: (608) 348-4433
EAGLE RIVER, WISCONSIN OFFICE PHONE: (715) 479-5311

ALL REPORTS, PLANS, SPECIFICATIONS, NOTES, COMPUTER FILES, FIELD DATA, AND OTHER DOCUMENTS PREPARED BY THE ENGINEER AS INSTRUMENTS OF THE DESIGN PROFESSIONAL AS INSTRUMENTS OF THE PROFESSIONAL SHALL RETAIN ALL COMMON LAW, STATUTORY AND OTHER RESERVED RIGHTS, INCLUDING THE COPYRIGHT THERETO. AND SHALL NOT BE DISCLOSED TO OTHERS, USED, REVISED, OR REPRODUCED IN WHOLE OR IN PART, FOR ANY PURPOSE WITHOUT PRIOR WRITTEN CONSENT.

DESIGN HOMES SATELLITE
PROPOSED 250 SQ.FT. SUNTRACKER
FRAME AND BASE
PRAIRIE DU CHIEN, WISCONSIN

SEAL:

NO.	DATE	COMMENTS
REVISIONS		

DATE DRAWN: JANUARY 2009
PROJECT #: 2008-071
SHEET NO: 01

File:F:\CAD\2008\08-071\268.sq.ft.panel\07-2709.dwg Plotted:10/9/2008 Plotted By: Rachel Zimmer Plot Style:Monochrome.ctb Plotter:None